NPFSR-K4F31MD

Input: 4-wire NO contact safety mat
Output: 3NO+1NC
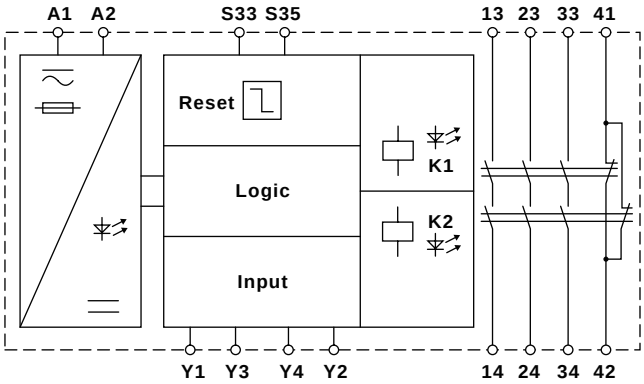
Functional Block Diagram